United States Patent

[11] **3,580,024**

[72] Inventor **Howard F. Mattil**
Yonkers, N.Y.

[21] Appl. No. **779,456**
[22] Filed **Nov. 27, 1968**
[45] Patented **May 25, 1971**
[73] Assignee **Phelps Dodge Copper Products Corporation**
New York, N.Y.

[54] **METHOD AND APPARATUS FOR CORRUGATING TUBES**
15 Claims, 5 Drawing Figs.

[52] **U.S. Cl.** **72/77**
[51] **Int. Cl.** **B21d 13/04**
[50] **Field of Search** ..... 72/77, 78, 95, 96, 370, 102—108, 57, 59; 29/421

[56] **References Cited**

UNITED STATES PATENTS

727,830	5/1903	Park	72/57
798,448	8/1905	Pogany et al.	72/100
2,430,210	11/1947	Bruegger	72/100
3,269,005	8/1966	Smith et al.	29/477.3
3,451,242	6/1969	Tobia	72/77
3,464,250	9/1969	Stetka	72/77

Primary Examiner—Richard J. Herbst
Attorney—Davis, Hoxie, Faithfull & Hapgood
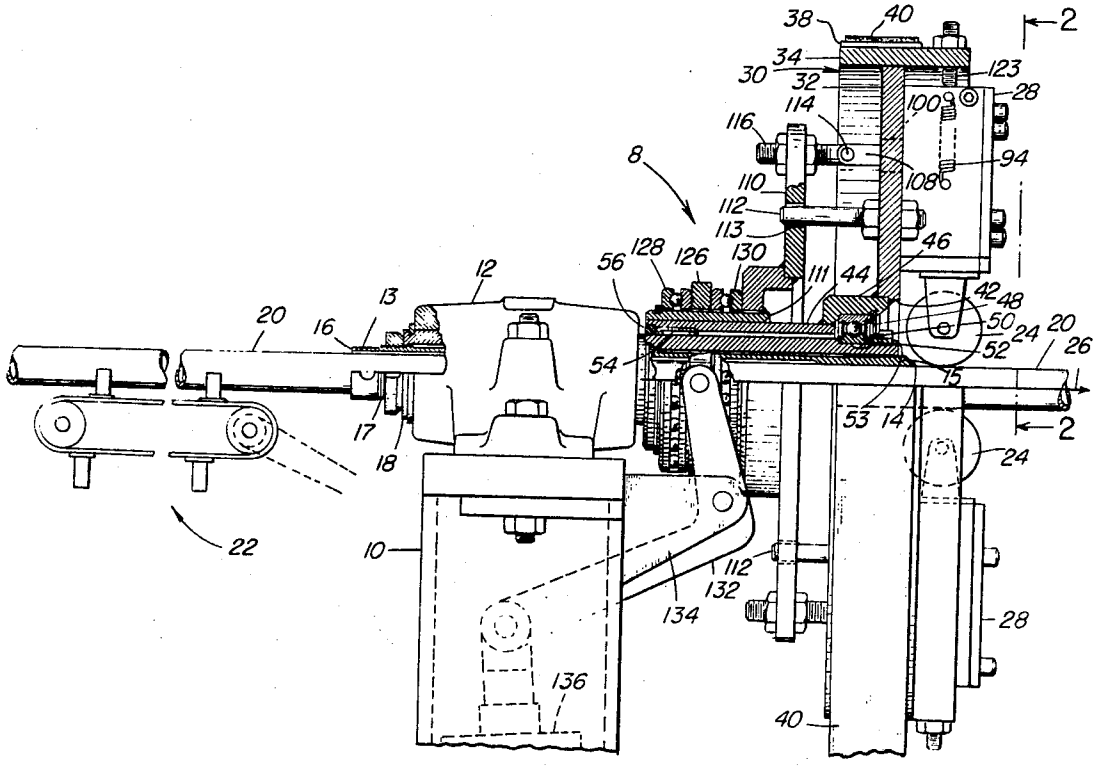
ABSTRACT: This invention comprises a tube corrugating method and apparatus in which a forming tool is selectively engaged forcefully with and disengaged from the tube while the tube advances axially past the tool. The tube may be pressurized internally with a fluid to improve corrugation shape.